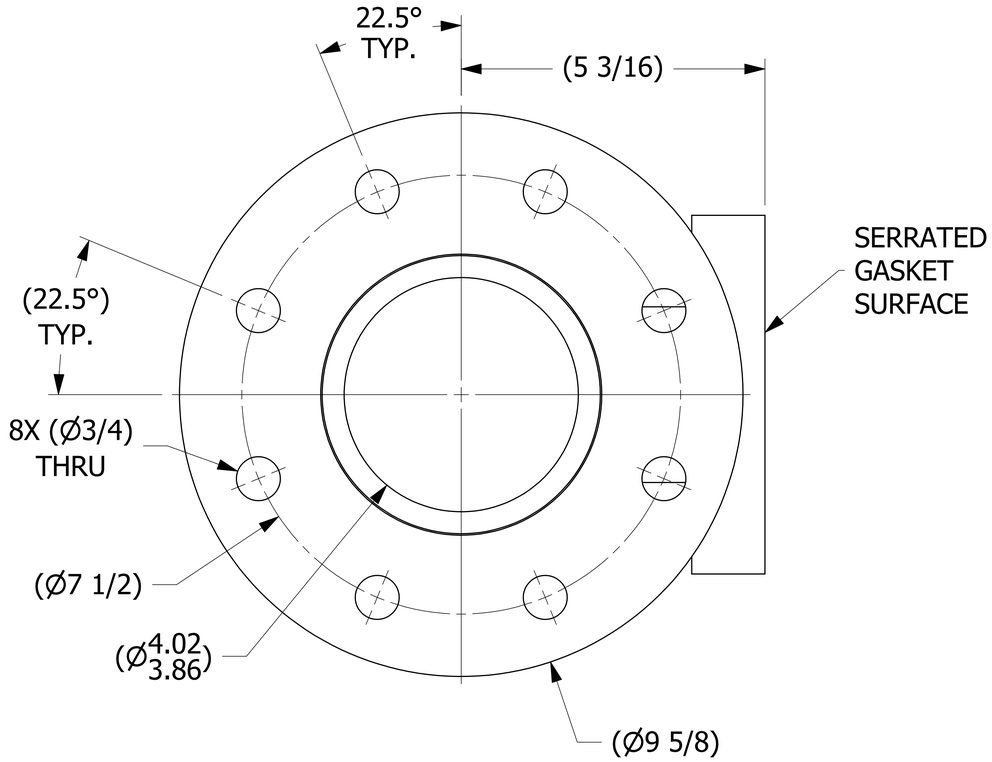

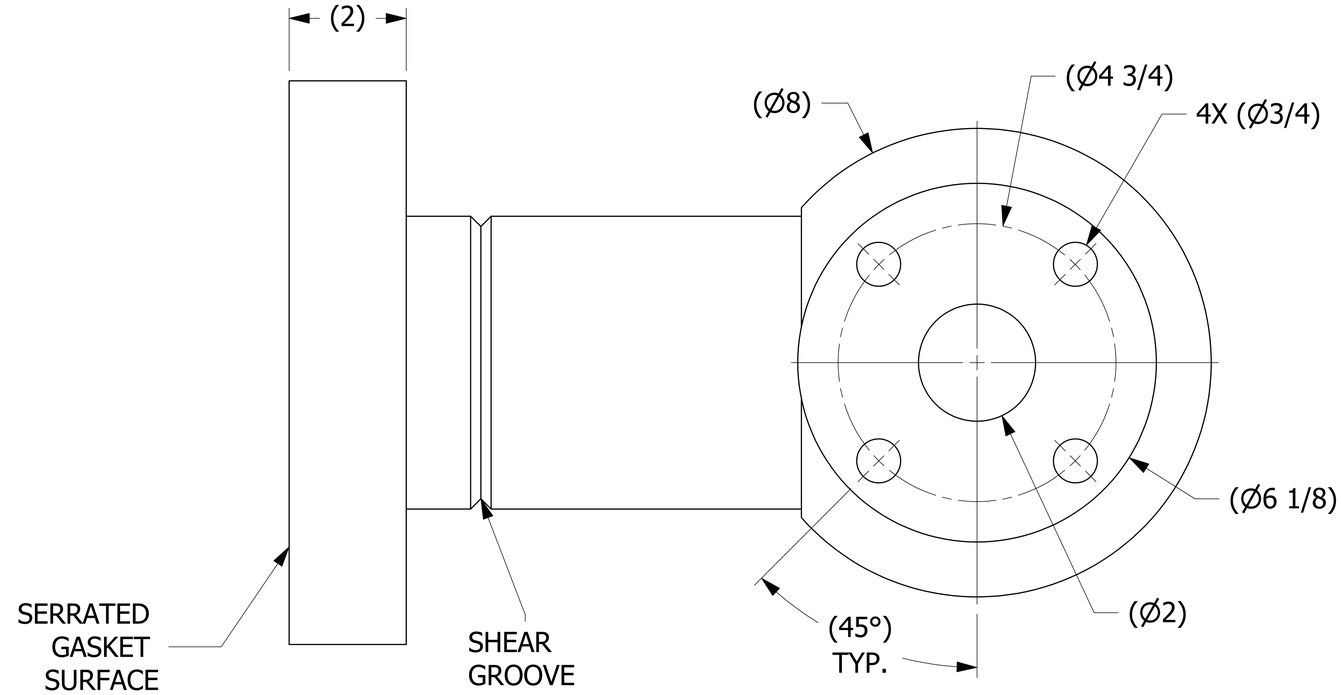

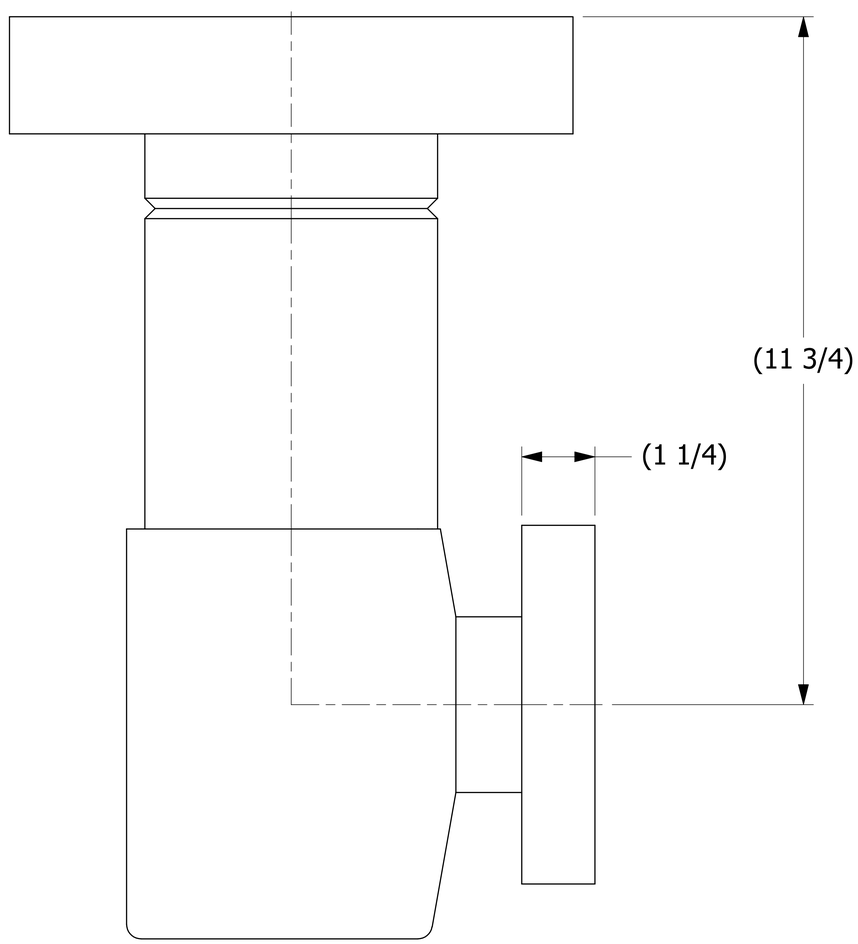

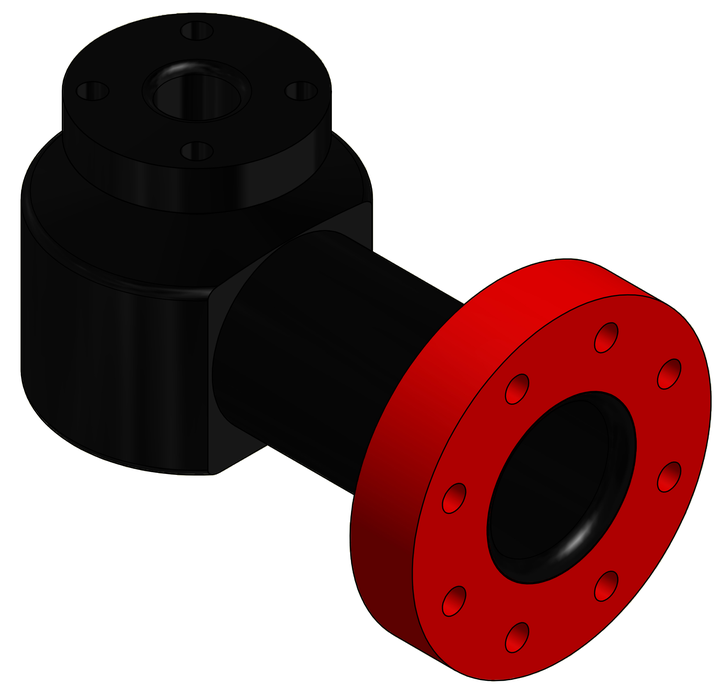

ISOMETRIC VIEW

SALES DRAWING SALES DRAWING

SALES DRAWING SALES DRAWING

REV	BY	DATE	DESCRIPTION
A	JG	3-21-16	RELEASED FOR PRODUCTION

UNLESS OTHERWISE SPECIFIED
DIMENSIONAL TOLERANCES
FRACTIONAL: ±1/16
X.XX: ±.03
X.XXX: ±.015
ANGULAR: ±1°
DEBURR ALL SHARP EDGES.
ALL MACHINED SURFACES TO HAVE A 125 RMS FINISH UNLESS NOTED OTHERWISE.
THIRD ANGLE PROJECTION

DRAWN BY:	JG
CHECKED BY:	EJF
PROTOTYPE BY:	JG
PROTOTYPE DATE:	3/18/2016
APPROVED FOR PRODUCTION BY:	EJF
PRODUCTION DATE:	3/21/2016

SALCO PRODUCTS, INC.

PART NAME: PIPE ELBOW 4"X2"X90º

MATERIAL: SALCO PE

PROJECT #: H160316F | SHEET #: 1 OF 1 | SCALE: 1:1

DRAWING #: E43459 | PART #: HS4X2X90PE11

THIS PRINT, PROPERTY OF SALCO PRODUCTS INC, CONTAINS PROPRIETARY INFORMATION AND MUST NOT BE COPIED, REPRODUCED, OR USED DETRIMENTALLY TO OUR INTEREST.